eosc | FAIR-IMPACT
Expanding FAIR solutions across EOSC

FAIRSFAIR
Fostering Fair Data Practices in Europe

Exploring how to improve the FAIRness of the Austrian Social Science Data Archive with F-UJI.

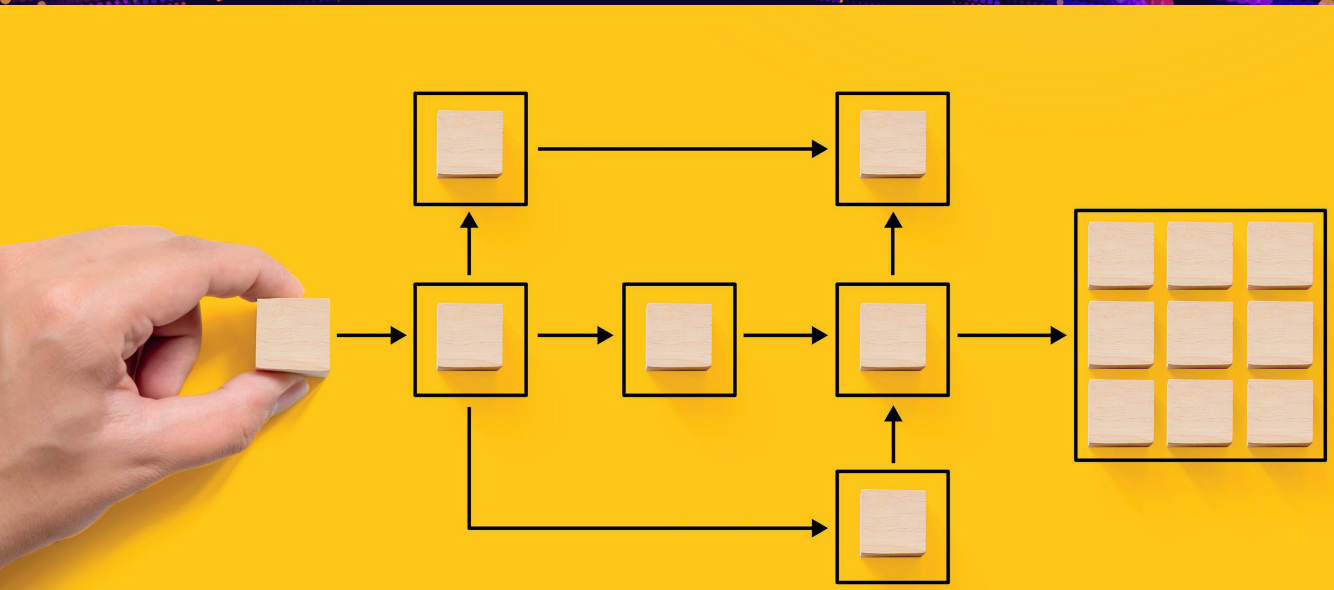

IMPLEMENTATION STORY

Authors names, affiliations and ORCIDs:

- Lars Kaczmirek, Vienna University Library and Archive Services, The Austrian Social Science Data Archive (AUSSDA), http://orcid.org/0000-0003-4868-2541
- Christian Bishof, Vienna University Library and Archive Services, The Austrian Social Science Data Archive (AUSSDA),
- Agnes Jasinska, Digital Curation Centre (DCC), https://orcid.org/0009-0000-7934-3679
- Clara Linés, Digital Curation Centre (DCC), https://orcid.org/0000-0003-3437-5145

Support action:

FAIRness Assessment Challenge. During the 3-month challenge participants took part in three virtual workshops to self-assess and incrementally improve the FAIRness of their selected outputs. During the support action, participants benefited from interacting with a group of mentors representing the various FAIRness assessment tools and methods.

Keywords:

F-UJI, Dataverse, social sciences

Summary:

A team overseeing the Austrian Social Science Data Archive (AUSSDA) used F-UJI to assess the FAIRness of their data repository as part of their reporting to the Consortium of European Social Science Data Archives (CESSDA), with the goal of further improving the FAIRness of their data holdings.

Introduction:

We are a team from the Vienna University Library and Archive Services and we oversee the Austrian Social Science Data Archive (AUSSDA)[1]. As a consortium of the universities of Vienna, Graz, Linz, Innsbruck, Krems and the Austrian Academy of Sciences, AUSSDA serves as the data infrastructure and a hub for support services for the entire social science community in Austria, while also representing the country in the Consortium of European Social Science Data Archives (CESSDA)[2]. AUSSDA runs on Dataverse[3] and is certified with the CoreTrustSeal[4] for trustworthy data repositories.

Even before participating in the support action, we planned to use F-UJI[5] to assess the FAIRness of our repository, because we have to report key performance indicators (KPIs) to CESSDA and they recommend the use of F-UJI for the assessment. In addition, CESSDA already did a F-UJI scoring on the data holdings in their data catalogue, including the AUSSDA, so we already had the scores and subscores for all our datasets before this exercise (a one-off assessment when we were starting to connect our KPIs), and we could focus on applying the output of the tool toward improvement.

We joined the FAIRness Assessment Challenge to gain a better understanding of FAIRness assessment tools. Since the F-UJI-derived KPIs that we are providing to CESSDA are also used to review the infrastructure of the consortium, this assessment activity is of crucial strategic importance to AUSSDA.

Approach taken:

We discussed internally and in the CESSDA consortium that it would be good to use a tool that can assess all datasets at once automatically and provide a score. But since the support action presented many other tools, we looked at those as well. However, because those other tools were manual, mostly answering questionnaires and then combining the numbers, we decided not to pursue them and instead to focus on F-UJI alone. It also helps that F-UJI is the implementation of a well-developed FAIR assessment metric from the RDA and there is a technical paper on that.

Challenges encountered and addressed:

The learning curve for installing a local F-UJI version was too steep and required IT staff resources that were unavailable to us. Since that seemed the only way to do a batch assessment, we decided to use the online tool for specific datasets and a scoring for all datasets that was provided to us prior to the support action.

In terms of the automatic assessment, F-UJI outputs are very specific (for example, “there’s no URL to the file on the landing page”). But in some cases, it would help to have more clarity on what F-UJI is seeing or where it gets the information from. We learned that F-UJI may miss the information when it is not located in the expected key in the metadata. Since that is not explained in F-UJI’s output, it can sometimes be difficult to realise that the tool is not considering that information. It was also unclear for us if the tool just obtains the information from the landing page, or if there are, for instance, the signposting links to DataCite, the tool looks at that information as well.

1 https://aussda.at/
2 https://www.cessda.eu/
3 https://dataverse.org/
4 https://www.coretrustseal.org/
5 https://www.f-uji.net/

It took us some time to understand the effects of the various options in the tool on the score. You can enter different parameters in F-UJI and receive slightly different scores, but it isn't clear why you should choose one parameter over the other in the online form, or what settings are recommended.

We discovered that we were already entering all the necessary metadata, but by comparing our F-UJI scores with those of other Dataverse instances in social sciences that were obtaining higher scores, we identified an action to increase the score. However, the necessary changes to the landing page (related to contentUrl property in the Schema.org JSON-LD metadata) required a Dataverse upgrade. We are on a regular site upgrade cycle, but an upgrade takes about 2 months. For that reason, we could not improve our FAIR assessment score substantially during the support action.

Nevertheless, from this exercise we got a better understanding of what subscores can improve and why, and based on that, we anticipate that when AUSSDA upgrades to Dataverse v5.13, the FAIRness scores for all our datasets with downloadable files should improve from around 60% to 80%, which was our goal.

Impact:

The support action helped us set up an assessment of all our datasets in AUSSDA using F-UJI that we plan to repeat every year. As already mentioned, we anticipate an increase in FAIRness assessment score of AUSSDA datasets due to Dataverse upgrades, consistent with the feedback from F-UJI assessment.

We now know what can be done to reach a F-UJI score of around 80% and I can share that knowledge with the Dataverse working group for CESSDA that I am co-chairing. We didn't identify anything that needed changing in our metadata workflows, but other archives in our group might find aspects to improve. So the impact would be on a broader social science community.

Key message:

When assessing the FAIRness of multiple datasets that differ in data and metadata, automatic tools such as F-UJI are a good choice. The score is calculated automatically, which saves a lot of time, and the assessment may be more objective than if done manually.

@fairimpact_eu

company/fair-impact-eu-project/

fair-impact.eu

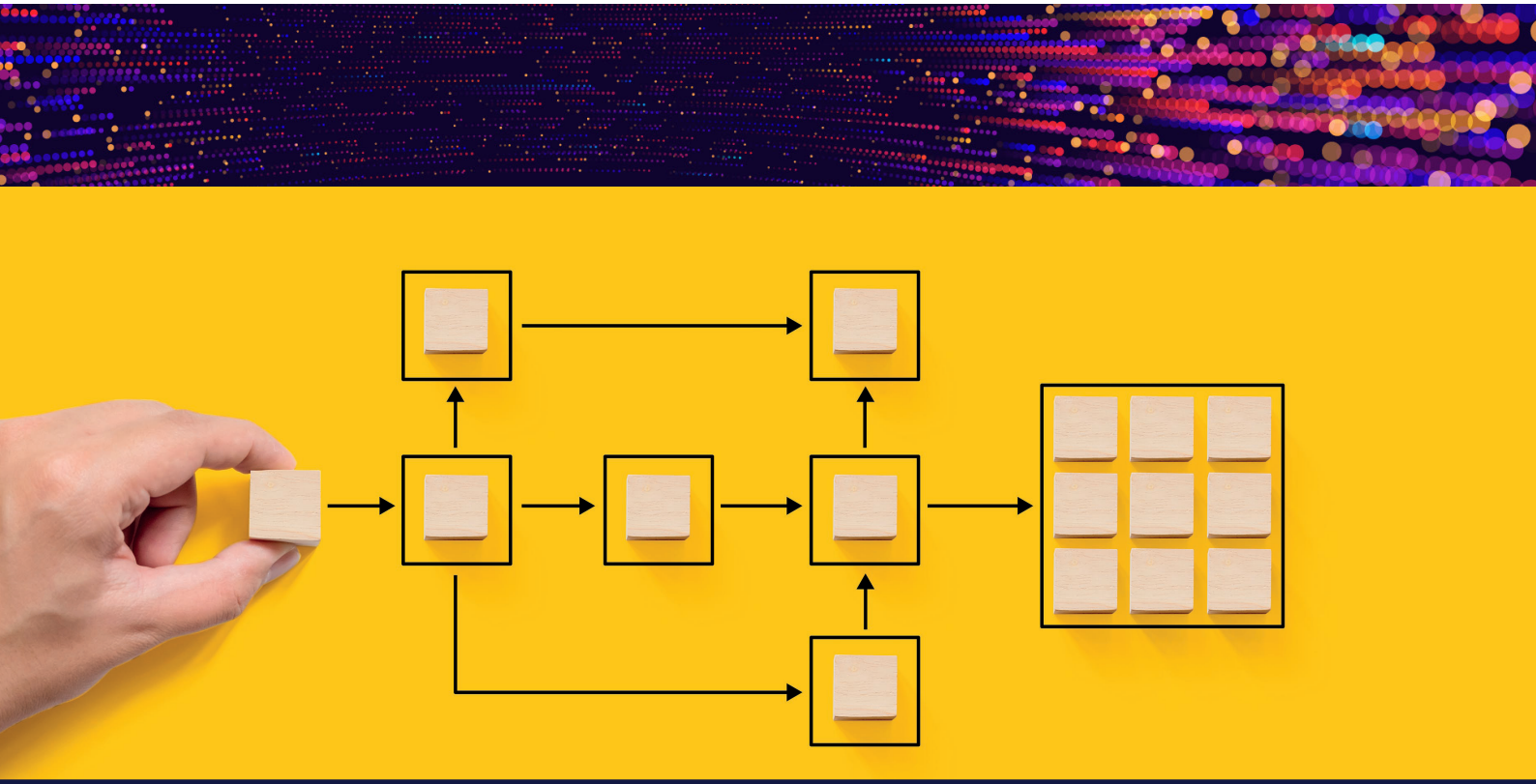

Funded by the European Union